EARLY COST ESTIMATION FOR INJECTION MOLDED PARTS

Adekunle A. Fagade and David O. Kazmer
Mechanical and Industrial Engineering Department
University of Massachusetts Amherst
Engineering Laboratory Building
Amherst, MA 01003

Abstract 1
Introduction 1
Research Objectives 2
Part Cost Estimation 3
  Mold Cost Estimation 4
    Related Research 4
    Proposed Approach 7
    Collection of Empirical Data 9
    Mold Cost Drivers 10
    Regression Results 13
    Model Comparison 15
  Material Cost Estimation 16
  Processing Cost Estimation 17
    Processing Yield Estimation 18
Implementation of Models in CAD and Internet 20
Conclusion 21
References 22

5800 words

Abstract

A product's complexity significantly impacts its manufacturing cost. Complexity is often factored into a product cost estimate by some rules of thumb or comparison to a reference parts whose manufacturing cost is assumed known. In spite of the wide usage of design for manufacture (DFM) and design for assembly (DFA) guidelines in part consolidation, the effects of a part's complexity on its tooling and manufacturing costs as well as its time-to-market are still largely undetermined. This paper investigates the number of dimensions that uniquely define the part geometry as a measure of its complexity. The metric was tested with empirical data for thirty injection molded parts from different suppliers and was found to have a highly significant correlation with mold costs and tooling lead-times. Models for estimating material and processing costs and yield at the early stages of design are also developed. In the integration of the developed models with CAD, the number of dimensions, part's envelope size and other models'parameters are enumerated directly from the CAD design. The developed methods enable real time evaluation of the effects of a product design on its tooling cost, tooling lead time, processing costs, and yield at the early stages of design.

Keywords: Mold Cost Estimating, Complexity, Plastic Injection Molding.

Introduction

The injection molding process is increasingly being used in the manufacture of complex net shaped parts of industrial and domestic electronic and electrical appliances. Designers are taking advantage of improvements in the process capability and engineering materials by consolidating multiple parts and functions into complex parts. One of the most frequently used set of guidelines for parts consolidation is the Design for Manufacture and Assembly (DFMA) guidelines developed by Boothroyd and Dewhurst [1]. One significant

benefit of DFMA is the considerable savings in assembly cost from fewer parts that need to be assembled. Other inherent benefits of DFMA are the encouragement of teamwork between design and manufacturing, and the improved product reliability from the reduced probability of system failure because of component failure.

In spite of expected savings in assembly costs, the complex parts have longer tooling lead-times and higher tooling costs. Hence, the net benefits of parts consolidation may be uncertain. However, the effects of parts consolidation on mold tooling cost and lead-time have not previously been quantified. The amortized tooling costs of injection molded parts constitute a very significant portion of their manufacturing costs, especially for technical applications. Tooling lead-times are also very important factors in today's very competitive market environments.

The early stages of product design provide a good opportunity for the optimization of these factors. However, in industry cost estimations are usually done when the design is well detailed, and by departments that are external to design. At this late stage of design, there is considerable inertia against any drastic changes. Tools for evaluating alternative design configurations for costs and tooling lead-times, from the computer-aided product data, will greatly facilitate optimization of component consolidation.

Research Objectives

The research vision is to develop real time design evaluation techniques that are available at very early stages of design. Advanced analysis techniques have been developed to provide many estimates of design performance. Typical types of analyses used in molded part design include structural (stiffness, impact, creep, fatigue), manufacturability (pressure distribution, cooling, shrinkage, fiber orientation), and economic (amortized tooling cost, material costs, machine costs). However, these numerical simulations may require complex

meshes and boundary conditions to be built on top of detailed geometry. As such, advanced analyses tend to be performed at the end of the design cycle, after the majority of critical design decisions have been completed.

Similarly, manufacturing cost estimates are made after design detailing. The detailed cost estimate is normally evaluated by an experienced cost estimator and results in a binding quote. The early cost estimate, however, is essential for the economic evaluations of design alternatives. If the early cost estimate includes cost factors that can be controlled by the designer in the early development phases, then the designer would receive valuable early feedback towards an optimum design. Thus, the cost models developed in this research are to be used for real time cost analysis at the early stages of design. Another objective of this research is the development of guidelines for optimum consolidation of multiple components of a product into fewer but more complex components. The component consolidation can be subject to different desired objective functions such as minimization of tooling costs or time-to-market, or maximization of profit. The injection molding of plastics has been chosen as the domain for this research because of the its usage in the manufacture of complex net shaped parts. The procedure developed here are however applicable to other net-shaped and near net-shaped parts producing processes such as metal die casting, forging, and stamping.

Part Cost Estimation

The cost drivers of manufacturing an injection molded plastic part are expressed in Equation 1. The material cost contribution, C_{mat}, is very significant, typically 50 to 80% of the total part cost. Tooling and processing costs are also significant cost drivers. The processing cost, C_{proc}, is dependent on the hourly rate charged for the usage of the injection molding machine as well as the processing yield, y_{proc}, which is the ratio of good parts to the

total number of parts produced. The tooling cost, C_{tool}, is amortized over the estimated production quantity N for the life of the tool.

$$C_{part} = C_{mat} + \frac{C_{proc}}{y_{proc}} + \frac{C_{tool}}{N} \tag{1}$$

Equation (2) is an expression for the assembled product cost. The m parts that constitute the product include both injection molded and standard purchased parts. The cost of assembly is the product of the assembly shop hourly rate, R_{assy}, and the total time required to assemble the m parts constituting the product. Thus the assembly cost decreases as part-count m decreases. The overhead cost per product C_{OH} includes both the shop and the administrative overheads.

$$C_{product} = \sum_{i=1}^{m} C_{part}^{i} + R_{assy} \sum_{i=1}^{m-1} t_{part}^{i} + C_{OH} \tag{2}$$

Mold Cost Estimation

Related Research

Two methods published in injection molding plastic design literature that address the problem of estimating mold tooling cost at the design stage are the Dixon and Poli [2] and the Boothroyd and Dewhurst [1] methods. The two methods agree that a part's geometric complexity is a significant contributor to its tooling cost. However, they evaluate part complexity differently.

The Dixon and Poli method estimates the relative tooling, material, and processing costs of an injection molded part from look-up tables. These costs are estimated relative to the cost of tooling for a simple reference part. The reference part used is a flat disc with outside diameter of 72 mm and inside diameter of 60 mm. The approximate tooling cost for this reference part, based on 1991-92 costs, is $7000 and includes about $1,000 in die material costs. Seven attributes that can be determined from the part at the design

configuration stage are used in evaluating a part's basic complexity, C_b, from a look up table. These attributes classify the part by its size, shape, number of walls with undercuts etc. Two multipliers of C_b, are also evaluated from look-up tables. They are the subsidiary complexity factor C_s and the tooling and tolerance factor C_t. C_s is a function of the number of form features in the part's cavity and number of undercuts. Once the design has been assessed, the relative mold construction cost, C_{dc}, and the total mold cost, C_{mold}, is evaluated as:

$$\begin{aligned} C_{dc} &= C_b C_s C_t \\ C_{mold} &= 0.8 C_{dc} + 0.2 C_{MB} \end{aligned}, \tag{3}$$

where C_{MB} is the mold base cost. These estimates are relative to the earlier mentioned reference part. It should be noted that the relative weighting between construction and material costs may not be universally correct. Moreover, the determination of subsidiary complexity, C_s, requires the judgement of the estimator in the classification of some cavity detail features as regular or irregular, and evaluation of undercut complexity as extensive or not extensive.

The Boothroyd and Dewhurst (B-D) method uses empirically derived formulas and estimated manufacturing parameters to estimate the times, t^i, for the different tasks that are carried out in transforming a purchased mold base to a finished mold. The sum of these times are then multiplied by an average shop rate, R_{tool}, to estimate the tool construction cost. The mold base cost, C_{MB}, is a function of the area of mold base cavity plate and the combined thickness of the cavity and core plates. Mold tooling cost is then the sum of mold-base cost and mold construction cost:

$$C_{mold} = R_{assy} \sum_{i=1}^{n} t^i + C_{MB}\,, \tag{4}$$

The B-D method calculates part complexity as a sum of inner and outer surfaces complexities. The surface complexities are estimated with an empirically derived formula

that sums the number of holes, depressions and surface patches. The generalization of all possible design features into the three categories limits the sensitivity of the B-D complexity index. In addition, the enumeration of surface patches is difficult and uncertain for moderately complex designs that may have blending surfaces and many protruding rib features.

Complex systems are known to consist of finite variety of interacting elements. According to Scurcini [3] the number, variety, types, and the organization of elementary components drive the complexity of a technological system. Since form and shape features constitute the basic components of a plastic part, an enumeration of the features in a designed part could be functionally related to its complexity.

In order to overcome the low sensitivity of the previous two methods of tooling cost estimation to changes in part complexity, our initial approach was to enumerate and assign a cost to every type of design feature. The cost would be proportional to the difficulty of reproducing the design feature in an injection molded part. These relative costs could be estimated through literature review of standard machining times and the interview of mold makers. As shown in Figure 1, injection molding form features were classified to conform to the Form Feature Information Model (FFIM) [4] established for the Standard for the Exchange of Product Data (STEP).

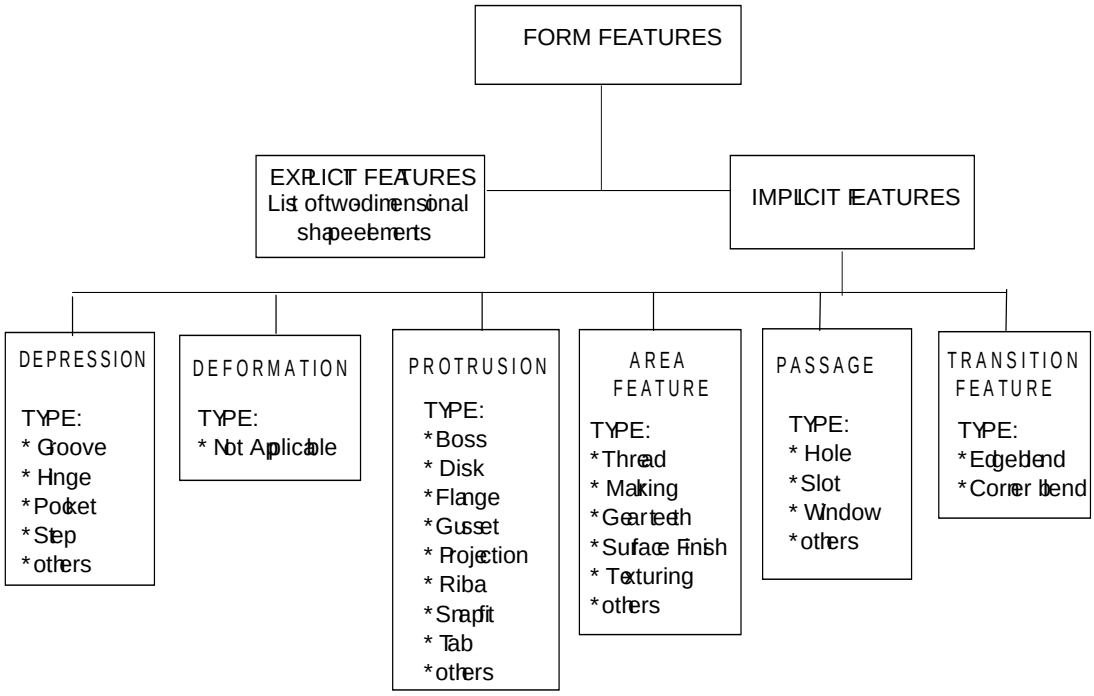

Figure 1: A Classification of Injection Molding Features

However, since the designer has the freedom to define application type features, as long as they fall within the FFIM classification, cost estimation models built on a fixed number of features are soon rendered obsolete. The impraticable alternative would be to constantly update the cost data for custom design features. Problems of feature recognition or extraction from either blueprints or CAD data also arise. Identifying and classifying all the geometrical features of a part correctly from its blueprints or even from a physical sample is not a trivial task. Problems such as whether to classify a set of parallel protruding features as ribs or grooves existed. Automatic feature recognition have only been reliably implemented for a restricting set of feature profiles. Thus an alternative approach to costing was sought.

Proposed Approach

For the purpose of cost estimating, we surmised that the number of dimensions that are used to define a feature is a measure of its complexity. Difficulty in manufacturing the

product will tend to increase as more dimensions that are required to define uniquely define its features. Every dimension represents an additional point to check or a setup to make in the manufacturing of the mold or the electrode that that will be used to electric discharge machine the mold. This reasoning is then logically extended to the total number of dimensions required to completely define the parts' model. This information is readily available within constrained-based type modelers, which include most 3-D modelers.

The total number of dimensions, *D*, is the number of parameters required to unambiguously define the part. In the current work, these were enumerated by counting all the dimensions on all blueprints that accompanied the request for quotes (RFQ). All dimensions in all views; elevations, sectional, and detail, were counted. When a view represents a repeated feature the number of dimensions is multiplied by the number of times the feature is repeated. Usually, such views if labelled in accordance with ANSI Y14.5M dimensioning and tolerancing standard [5], show how many times the feature is repeated by a number and an X as in Figure 2. Table 1 shows the procedure used in enumerating the dimensions of the part shown in Figure 2.

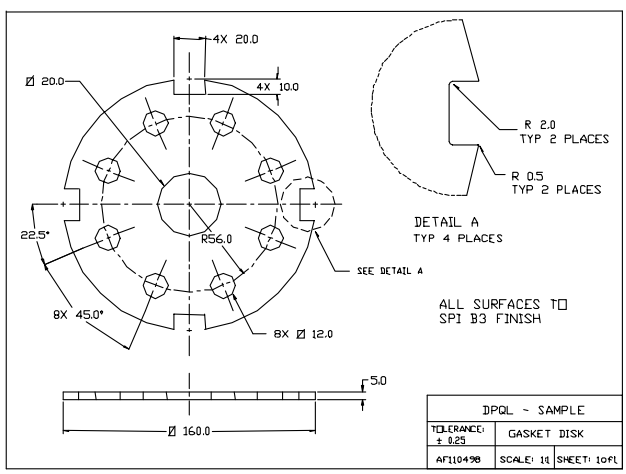

Figure 2: Sketch of a low complexity part

Table 1: Counting Dimensions of Gasket Disk

Envelope Size: 160x160x5 mm^3	=	128 cc
Type and number of dimensions		
Circular hole features	=	8 (1 x 8)
Angular spacing of holes	=	8
Dimensions of slots	=	8 (2 x 4)
Diameter of center hole	=	1
Radial distance of holes	=	1
Ref. angle from center line	=	1
Envelope dimensions	=	2
Chamfer radii	=	16 (4 x 4)
Total number of dimensions	=	45

Collection of Empirical Data

A custom injection molder in Western Massachusetts assisted in this research. Original equipment manufacturers (OEM) submit requests for quotes (RFQ) to this company. The company in turn sends out requests for tooling quotes to moldmakers locally and overseas. Seventy-five mold tooling quotes of single cavity molds for thirty of the parts that the company has quoted for in the past three years were selected for analysis from its records. The thirty parts vary in size from a small reset-button with basic envelope size of 22 cc and 17 basic dimensions to a large sewage pump enclosure with size 136,282 cc and 153 dimensions.

The origin of the seventy-five tooling quotes for the thirty parts were also geographically diverse. Mold makers in various parts of the US, Canada, Spain, and Taiwan supplied the mold quotes. It was the normal practice of the custom injection molder to obtain quotes from three or more different mold makers in its cost estimation process. The job was awarded to the mold maker based on cost, lead-time, and past performance. The size of the part, qualitative complexity, number of slides, gate type, surface finish, and ejection system are some of the factors that are considered in the estimation of a part's tooling cost.

When the quote from a toolmaker falls outside a reasonable range estimated by the tooling engineer, it could be due to one of three reasons. If the mold quote is too low, the toolmaker may have failed to consider the need for slides or other factors not apparent from the blueprint or CAD model. In this case, the molder's tool engineer tries to confirm that the toolmaker considered all design specifications. If the quote is too high, the moldmaker may be at capacity and would only accept the job at a premium. Finally, the tooling engineer at the molder could have misunderstood some design specifications.

There is often the post-design stage cross communication among the three parties: the design engineers of the product developer, the tooling engineer of the molder, and the toolmakers. Engineering changes, usually minor, that may reduce tooling cost and/or facilitate molding, are suggested to the product designers and are either accepted or rejected. However, the recent trend is towards simultaneous engineering among these three parties. This trend is facilitated by improved communications and CAD data protocols. Prototypes or preliminary designs are being sent via the internet to injection molders and moldmakers for their immediate feedback. This practice significantly reduces product development time and product cost.

Mold Cost Drivers

The thirty parts, their mean mold quotes (MMQ), mean estimated tooling lead times (MLT), and their geometrical attributes are as shown in Table 2. Only RFQs accompanied by blueprints that have adequate detailing for tooling were selected. Only three quotes that were much higher or much lower than the average quotes for the same part were discarded due to the probability of over or under estimation, as mentioned previously.

Table 2: Quotes and Attributes of Observed Parts

#	C_{mold} ($K)	T_{mold} (wk)	S (cc)	D	A	HF	HT
1	67.27	15.5	27349	250	2	Y	N
2	27.50	14.0	327	64	0	N	N
3	25.38	13.5	352	99	1	N	N
4	35.70	13.7	4199	181	0	Y	Y
5	17.22	12.5	17	22	1	N	N
6	19.35	12.0	344	153	1	N	N
7	38.00	15.0	675	108	2	N	Y
8	20.10	12.5	450	53	0	Y	N
9	68.50	18.0	3334	141	3	N	Y
10	63.89	18.5	25486	289	1	Y	N
11	41.93	15.0	855	152	4	Y	Y
12	56.00	18.5	9997	495	0	N	N
13	66.90	17.7	35928	286	1	Y	N
14	57.82	16.0	1371	172	4	Y	Y
15	67.43	17.3	16453	372	1	Y	Y
16	143.86	21.0	108023	613	2	Y	Y
17	47.97	16.5	14839	137	0	Y	Y
18	127.00	21.0	136282	153	2	N	N
19	84.80	19.0	60853	337	0	N	N
20	31.00	12.0	1524	164	2	N	N
21	29.90	12.0	2927	123	0	N	Y
22	22.70	11.0	284	40	0	N	N
23	14.90	11.0	127	57	0	N	N
24	111.74	20.5	75821	28	1	N	N
25	40.55	14.5	9176	31	0	N	N
26	36.00	13.5	3722	101	0	N	N
27	37.15	14.0	421	93	1	N	Y
28	45.47	14.5	2949	126	3	Y	N
29	97.87	16.5	54919	46	0	Y	Y
30	20.95	14.0	210	67	0	Y	Y

Some significant mold tooling cost drivers such as part size, part complexity, number of walls with undercuts, surface finish and tolerance level were identified through literature review, the industrial experience of the authors, and interviews with mold makers. The methods used for determining part complexity here differs from any previously published method. Prime consideration were given to parts' attributes measurable from its blueprints or CAD model such as size, number of dimensions, part projected area, material volume of part, number of critical-to-function dimensions, and dimensional tolerances. Multiple regression analyses were performed with the mean mold quotes and mean lead-times as dependent

variables and a systematic combination of the other attributes as independent variables. Low correlations were found between the dependent variables and some independent variables such as part material volume and part projected area which were thus omitted from Table 2.

In Table 2, the envelope volume, *S*, measures the size of the part in cubic centimeters. This is the volume of a rectangular box that completely encloses the part Figure 2. Even where a long projection is isolated, the envelope volume still determines the size of the mold base and to some extent the manufacturing work required to make the mold. The number of actuators, *A*, is the total number of separate mechanisms that have to be constructed into the mold to permit molding of internal and external undercuts, and screw features on the part. Undercut features that lie on the same wall of the part and that are within 75mm distance of each other are are assumed to require one slide mechanism. Every screw feature is assumed to each require a separate unscrewing mechanism. The parts with Y (Yes) under the columns labelled HF and HT require high polish finishes and tight plastic tolerances, respectively. Parts with surface finish specifications of SPI A1, A2, and A3 or that are textured on more than 25% of their entire surface areas are classified as having high polish finishes. Parts with surface finish of SPI B1 or less on more than 75% of their surface areas, are classified as having normal finishes. Plastic tolerances are specified as percentages of overall lengths. Due to shrinkage characteristics of polymers, longer parts are normally specified with larger tolerances. A cut-off value of 0.07% of absolute percentage tolerance per unit length was used to classify the observed parts as having tight or normal plastic tolerances. Parts with absolute percentage tolerance per unit length less or equal to 0.07% were classified as having tight tolerances, while those with greater values have normal tolerances. The decision was guided by a table of dimensional tolerances allowed to mold makers [6].

Regression Results

In the summary outputs of the regressions, the sample coefficient of multiple determination, R^2, is the proportion of the total variation in the dependent variable that is explained by or accounted for by the regression model that is formed by the independent variables. R^2 can take on values between 0 and 1, where a better fit is obtained as R^2 approaches 1. The regressions were done at the 95% confidence level. The R^2 values obtained with the mean mold quotes as the dependent variable was greater than the value obtained with the individual seventy-five mold quotes. This is because the mean mold quotes provided a degree of central tendency towards the "actual" mold costs. The resulting cost model derived using just size, *S*, and number of dimensions, *D*, as the independent variables is:

$$\begin{aligned} C_{mold} &= 28300 + 0.81S + 45.6D \\ R^2 &= 0.869 \end{aligned} . \tag{5}$$

Equation (5) shows that size and number of dimensions explain 87% of the variation in mold cost of the sampled parts. The intercept, 28,300, represents on the average the lower bound on the mold costs. Three other part attributes (number of actuators, *A*, high surface finish, *HF*, and high tolerance, *HT*) can be included in the regression analysis, with the latter two having only 0, 1 states. The model now explains 91.1% of the variation in the mold costs:

$$\begin{aligned} C_{mold} &= 22500 + 0.82S + 30D + 2940A + 7630HF + 5470HT \\ R^2 &= 0.911 \end{aligned} . \tag{6}$$

The mean tooling lead-time has a lower but still very significant R^2 value when regressed against size and total number of dimensions (complexity), as shown in Equation 7. The imperfect correlation may be due to other molder specific factors, such as maching availablity or willingness to expedite a job to gain a customer. The minimum of 13 weeks can be considered the minimum lead time that molders would normally take to tool a simple

part. Historical data of these internal production parameters were not (and are not typically) available to molders, and thus could not be used in developing the following predictive model:

$$\begin{aligned} T_{mold}(weeks) &= 13 + 0.000055S + 0.007D \\ R^2 &= 0.7 \end{aligned} . \tag{7}$$

These results are surprising and useful. Increases in complexity, as measured by the number of dimensions, have a greater impact on tooling cost and tooling lead-time than similar size increases. Equation (7), shows that every 100-count increase in number of dimensions, which is a normal phenomenon when parts are consolidated into complex parts, increases tooling cost by $4560, and tooling lead-time by 5 days. A comparable increase in mold cost due to size increase is only possible if the size of the part is increased by 5,600 cc, a six-fold increase if starting with a 1000 cc part.

The results show that consolidation of parts is preferable when the parts to be combined have low complexity. Consolidating two already complex components into a more complex piece may increase tooling cost and tooling lead-time drastically. The cost incurred in higher tooling cost and lost sales due to late market introduction may surpass the benefits expected from the parts consolidation. When timely market introduction of a product is critical to its life cycle profit, it is preferable to develop and parallel-tool simple components for automatic or manual assembly than to combine components into a complex piece. The single complex tool may take longer to tool and may cost more than the individual tools put together. Consolidation may later be done when demand is stable and new sets of tools are being ordered for large production runs.

The models described can be easily developed by any organization that has historical data on mold costs. The regression coefficients will differ with different data set but their

proportion will be approximately the same. The accuracies of the models are higher than the accuracies of estimates from human cost estimators, that may vary within 50% of actual costs based on Malstrom [7] as well as the empirical data from this study.

The mold costs and lead-times estimated with Equations (6) and (7) are plotted against observations in Figure 3. Estimates for aluminum molds for some of the thirty parts are also plotted. It can be observed that the models overestimate the tooling costs and lead-times for aluminium molds, indicating the need to adjust the model coefficients down for aluminum molds. It is recommended that a chi-squared statistical test should be performed to check that the actual costs are not significantly different from their estimates at a siginificance level of 10%, that is $\alpha/2 = 0.05$. If it is different, a re-evaluation of the multiple regression coefficients using the new quotes should then be implemented.

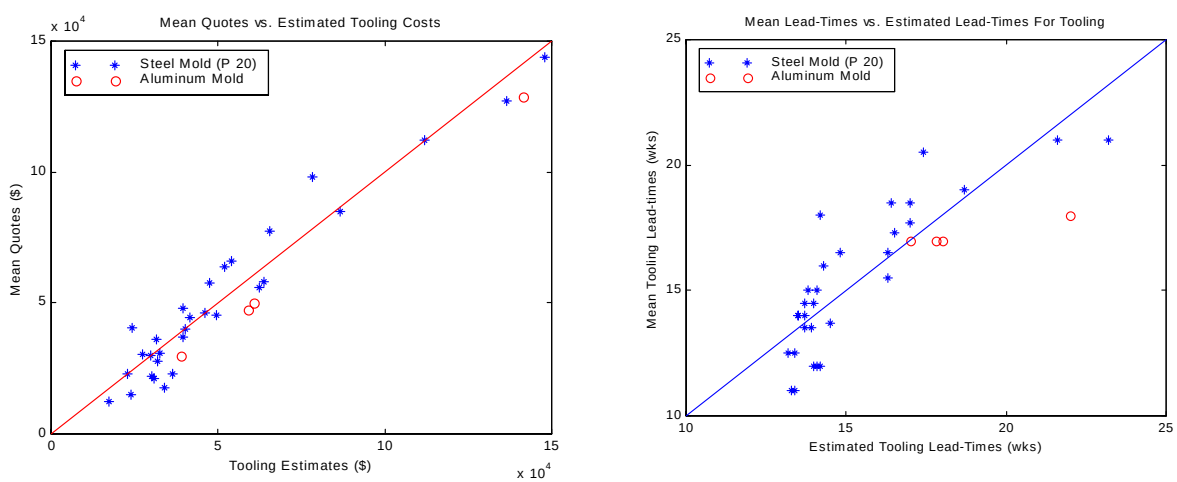

Figure 3: Comparison of Mold Cost and Mold Lead-time Estimates

Model Comparison

Mold estimates of two test parts were made using B-D, D-P, and the proposed model in equation (5). The reported quotes for each of the parts were received from three different mold makers. The first part is a Ø73mm x 29.4mm deep, end-cap-base of a water filter. It

has an outside circumferential thread split diametrically in two halves. The mold dividing surface is aligned with the thread for easy ejection. The required surface finish is SPI A3. This part has an envelope size of 154 cc and is defined with a total of 73 blueprint dimensions. The second part is the top housing of a medical laboratory analyzer. The envelope dimensions are 375mm x 200mm x 56mm. The part is defined by 181 dimensions. The features include three big and two small square windows for assembly and accessing internal components, as well as structural ribbing. The exterior surface is textured while the inside surface needs a regular SPI B1 finish. The results are summarized in Table 3.

Table 3: Comparison of Cost Estimates ($K)

Source of Estimate	*Test Parts*	
	End Cap	*Top Housing*
D-P	14.69	47.2
B-D	5.43	17.52
F-K	30.6	39.9
Mean Quote	17.3	38.5

The results indicate that the B-D model underestimates the costs of the molds and underpredicts the relative sensitivity between the two designs. The D-P model exhibits greater range than the observed mold quotes, but is likely the best predictor for these two test parts. The proposed model overpredicts the mold cost and does not exhibit adequate sensitivity. It should be noted, however, that the model utilizes only three parameters and requires assessment of only size and complexity. Moreover, these two design assessments can and have been easily automated within CAD systems and modern product development processes.

Material Cost Estimation

Material cost per part, C_{mat}, is the cost of direct material that goes into making the part. For injection molding, this includes the cost of the plastic polymer, additives, and

fillers consumed per part. The following equation expresses C_{mat} as a function of material volume, V, density, ρ, and polymer price per unit mass, P:

$$C_{mat} = \frac{V P \rho}{1 - f}. \tag{8}$$

The part volume, V, is easily computed from a 3D model of the part at the design stage. Polymer density, ρ, is obtainable from polymer handbooks such as the Modern Plastic Encyclopedia [8] or from resin vendors. The runner and sprue weight contribution to total material consumption is significant for small parts but negligible for large parts. For most thermoplastic materials, moreover, runners and sprues can often be recycled without significant loss in final part quality. In practice, after four cycles of repeated recycling the thermoplastic is significantly degraded that it is completely different from the virgin material. Hence, in practice up to 15% recycled material from reground runners, sprues, and second class quality parts are blended with virgin material. (One notable exception is the prohibition of recycled resin in medical, and food related applications by the Food and Drug Administration). Since at the early stage of design, the optimum number of cavities in the mold and hence the runner volume are unknown a conservative estimate for f is 10%. This agrees with a promotional literature from Du Pont [9].

Processing Cost Estimation

The processing cost per part, C_{part}, constitutes 40 to 80% of the part cost for both commodity and engineering plastic parts. Efforts to reduce the processing cost at the design stage easily translate to significant savings per part and to very large. C_{proc} is a function of the machine hourly rate, R_{ma}, production yield, P, and the cycle time, t_c, required to mold the part:

$$C_{proc} = \frac{R_{ma} t_c}{3600P}. \tag{9}$$

The cycle time has been estimated by performing a transient thermal analysis to model the structural rigidity of the part required for ejection [10]. The machine rate, R_{ma}, is the amount charged per hour for the usage of the injection molding press. It is a convenient way of summarizing the direct processing cost that is traceable to the part as well as the indirect processing costs that is allocated to it. The direct labor content of R_{ma} is the operator wage(s), while the indirect costs include the costs for the consumption of utilities and consumables by the press as well as a depreciation charge. The machine rate ($/h) charged in the custom injection molding shop in Western Massachusetts, has a linear correlation with the machine clamp force, F_{cl}, measure in tons. Equation 10 show the linear function that closely fits this data with a regression squared value of 0.986. This function is comparable to a similar relationship used by Boothroyd and Dewhurst when adjusted using 4% inflation as shown in Equation 11.

$$R_{ma} = 31.33 + 0.725F_{cl} \qquad 20 \le F_{cl} \le 1500 \tag{10}$$

$$R_{ma} = 32.00 + 0.631F_{cl} \qquad 20 \le F_{cl} \le 1000 \tag{11}$$

Processing Yield Estimation

Part quality attributes may exhibit some inconsistency due to manufacturing process, material, and operator variation. The probability of producing an acceptable product, *P*, is a function of the probability density function, *pdf*, and the product specification limits, *LSL* and *USL*, for each *i-th* quality attribute, y_i:

$$P = \oint_{LSL_i}^{USL_i} pdf(y_i)dy \tag{12}$$

It is infeasible to assess the multi-dimensional probability density function across the process domain, even if the variance and relationships between processing variables and

quality attributes are deterministic. As such, one approach is to assume Gaussian distributions corresponding to measured process capabilities. Hunkar Laboratories Inc. in Ohio [11] has developed a classification of injection molding machines from its survey of hundreds of machines over many years. Deviations from the set of optimal process parameters required to obtain the quality characteristics of a part are due to complex interacting variations of noise variables, represented by a vector **n** = {n_j }, where j = 1,2, …,m. Frey and Otto [12] argued that though functional relationship between noise variables and quality characteristics are in general non-linear, a linear relationship can be assumed in the neighborhood of a target vector, **t**. Equation 13 shows that the normalized deviation of quality characteristic, δy_i**,** is directly proportional to the deviation of the noise variables from their target value, given the assumption of linearity in the neighborhood of the target noise variable. However, the values of constants k_{ij} are not known.

$$\delta y_i = \frac{1}{USL_i - LSL_i} \sum_{j=1}^{m} k_{ij} \cdot \left(n_j - t_j\right). \tag{13}$$

The matrix of constants, k_{ij}, relating changes in each noise variable to changes in the quality characteristics can be determined by experimentation, by analyzing historical data, by complex deterministic computations, or by simulating the process. This last approach, using random event simulation and relative machine capabilities was used to predict process yield for each class of machine.

The results are shown in Figure 4. The results indicate the trade-off between machine capability, number of critical to function specifications, the passband of the specifications, and defect rates. Figure 4 clearly identifies that machines with low class factors (highly capable) will produce consistent moldings independent of the number of critical dimensions specified. However, average and poor machines may present significant quality problems,

especially when multiple dimensions are specified to tight tolerances. While the methodology has been developed and validated from a statistical perspective, it is impractical to believe that the yield predictions will be quantitatively accurate, especially under development uncertainty when future defect types may not be identified. However, the developed method can provide qualitative and immediate feedback regarding the effect of design complexity and specification tightness on the potential processing yields and cost.

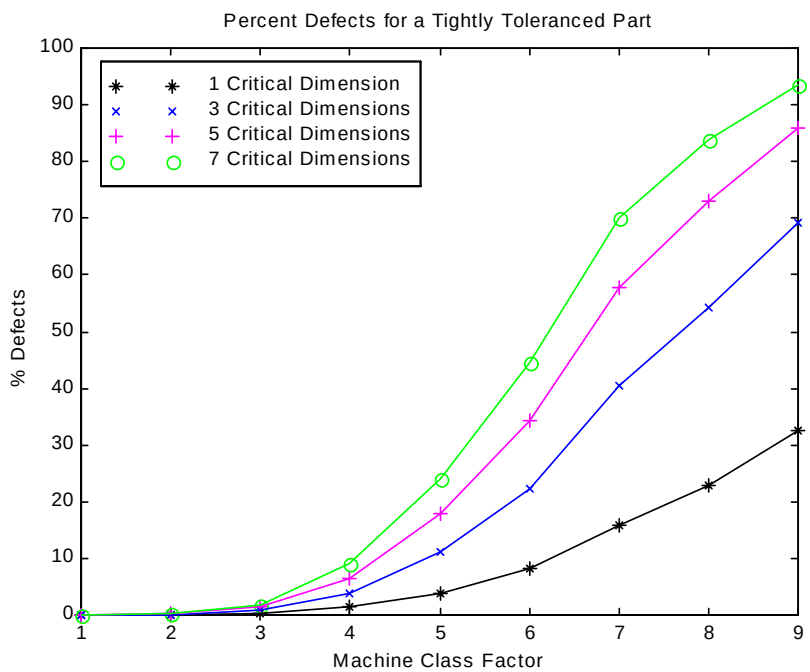

Figure 4: Defects rates for part with tight specifications

Implementation of Models in CAD and Internet

The models developed in this research have been implemented within the SolidWorks CAD system. The application evaluates a CAD model of a plastic part for its basic envelope size, complexity, and number of cores. The user inputs information on surface finish, tolerance level, and estimated production volume, *N*. A typical output screen is shown in Figure 5.

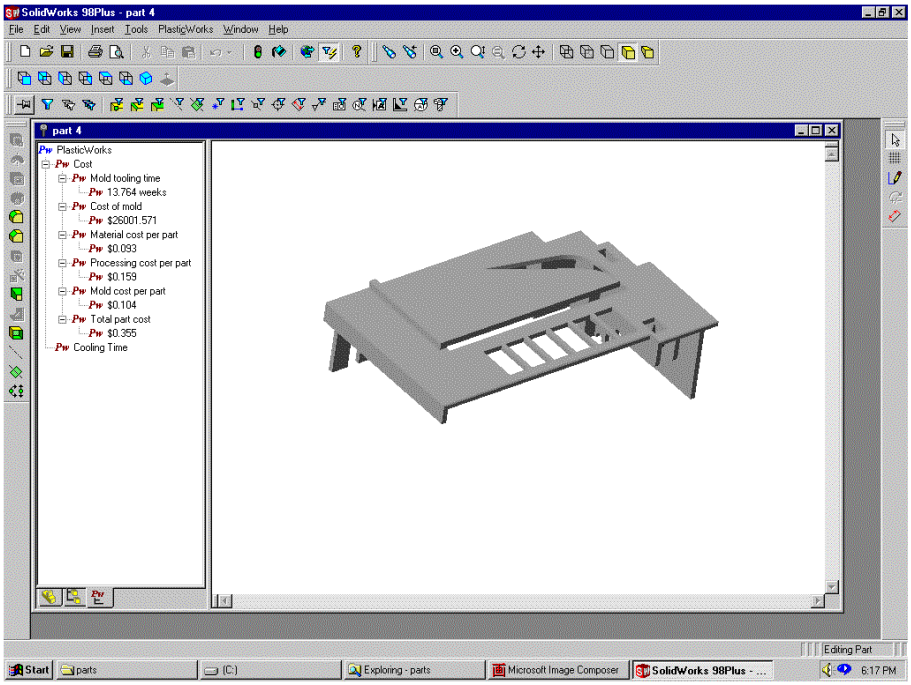

Figure 5: Output Screen for CAD Implementation of Cost Estimator

A world-wide web input interface has also been developed to make the cost estimator available to the public. Through a drag and drop interface, users can FTP their CAD files to this site and immediately receive estimates of mold costs, processing costs, and lead-times. The system utilizes the cost models presented in this paper and currently evaluates with single components rather than assemblies. Further research is required to develop improved, application-specific cost models that leverage data and capabilities from specialized industry suppliers.

Conclusions

This research has developed an automated costing methodology that designers of plastic parts can use when comparing alternative designs for cost and time to market. The method evaluates a part's complexity at the early stages of its life cycle using the number of dimensions from its geometric model. Validation was performed using seventy-five different

mold quotes across thirty different molding applications, indicating a high correlation of part complexity with the mold tooling cost and lead-time. All the independent variables in the models developed can be easily evaluated from feature-based CAD data. This enumeration of number of dimensions is a pratical alternative to the use of complex algorithms for extraction and enumeration of constantly changing design form features. The results of the research are unique in their simplicity when compared to related work.

References

[1] G. Boothroyd, P. Dewhurst, and W. Knight, *Product design for manufacture and assembly*. New York, NY: Marcel Dekker, Inc, 1994.

[2] J. R. Dixon and C. Poli, *Engineering design and design for manufacturing, a structured approach*. Conway, MA: Field Stone Publishers, 1995.

[3] G. B. Scurcini, "Complexity in Large Technological Systems," presented at Measures of Complexity, Rome, 1987.

[4] J. J. Shah and M. Mantyla, *Parametric and Feature-based CAD/CAM: Concepts, Techniques, and Applications*: John Wiley & Sons, Inc., 1995.

[5] ASME, *ANSI Y14.5M, American National Standard Engineering Drawings and Related Documentation Practices: Dimensioning and Tolerancing.* New York: American Society of Mechanical Engineers, 1982.

[6] D. V. Rosato and D. V. Rosato, *Injection molding handbook : the complete molding operation technology, performance, economics*, 2nd ed. New York: Chapman & Hall, 1995.

[7] M. Malstrom, *Manufacturing Cost Engineering Handbook*. New York, NY: Marcel Dekker Inc., 1984.

[8] MPE, *Modern Plastics Encyclopedia 96*, vol. 72, 1996.

[9] DuPont, "Concepts in Engineering Plastics," in *Promotional Literature of E.I. DuPont de Nemours & Co. Wilmington, DE*, 1978.

[10] H. Xu and D. O. Kazmer, "A Stiffness Criterion for Cooling Time Estimation," *International Polymer Processing*, vol. 13, pp. 249-255, 1999.

[11] Hunkar, "The Injection Molding Machines Class Factor," : Hunkar Laboratories Inc., 7007 Valley Avenue, Cincinnati Ohio 45244 USA, 1998.

[12] D. D. Frey, K. N. Otto, and J. A. Wysocki, "Evaluating Process Capability given multiple Acceptance Criteria," *MIT Design Research Report*, 1997.